PCMflash	Engine Control Unit PAJERO

MH8302F/MH8304F

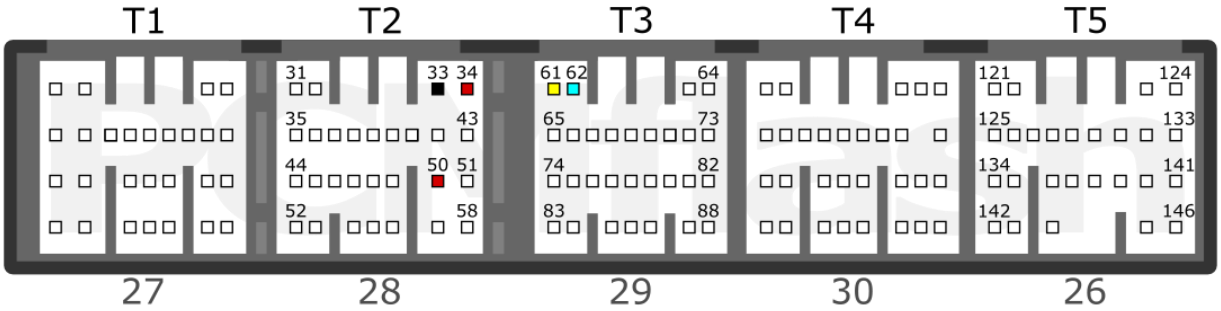

+12V	T2: 34, 50	**CAN-L**	T3: 62
GND	T2: 33	**CAN-H**	T3: 61

MITSUBISHI		
pcmflash.ru	v.1	2024-02-04